DS-2CD2686G2T-IZS
8 MP IR Varifocal Bullet Network Camera

- 1/2" Progressive Scan CMOS
- 3840 × 2160 @ 20fps
- 2.8 to 12 mm lens
- 120dB WDR
- Powered by Darkfighter
- H.265+, H.265, H.264+, H.264
- Built-in micro SD/SDHC/SDXC card slot, up to 256 GB
- IP67, IK10
- **Human and vehicle classification alarm** based on deep learning.

AcuSense

Empowered by deep learning algorithms, Hikvision AcuSense technology brings human or vehicle target classification alarms to front- and back-end devices. The system can greatly reduce false alarms generated by targets other than humans or vehicles, vastly improving alarm efficiency and effectiveness.

Specifications

Camera	
Image Sensor	1/2" Progressive Scan CMOS
Min. Illumination	Color: 0.011 Lux @ (F1.4, AGC ON), 0 Lux with IR
Shutter Speed	1/3 s to 1/100,000 s
Slow Shutter	Yes
Day & Night	IR Cut Filter
WDR	120 dB
Angle Adjustment	Pan: 0° to 355°, tilt: 0° to 90°, rotate: 0° to 360°
Lens	
Lens Type	2.8 to 12 mm
Aperture	F1.4
FOV	Horizontal FOV: 108.1° to 45.5° , vertical FOV: 58.4° to 25.7° , diagonal FOV: 127.3° to 52.1°
Lens Mount	Φ14
Illuminator	
IR Range	Up to 50 m
Wavelength	850 nm
Video	
Max. Resolution	3840 × 2160
Main Stream	50Hz: 20fps (3840 × 2160, 3072 × 1728), 25fps (2688 × 1520,1920 × 1080, 1280 × 720) 60Hz: 20fps (3840 × 2160, 3072 × 1728), 30fps (2688 × 1520,1920 × 1080, 1280 × 720)
Sub-Stream	50Hz: 25fps (640 × 480, 640 × 360, 320 × 240) 60Hz: 30fps (640 × 480, 640 × 360, 320 × 240)
Third Stream	50Hz: 25fps (1280 × 720, 640 × 480, 640 × 360, 320 × 240) 60Hz: 30fps (1280 × 720, 640 × 480, 640 × 360, 320 × 240)
Video Compression	Main stream: H.265+/H.264+/H.265/H.264 Sub-stream: H.265/H.264/MJPEG Third stream: H.265/H.264
H.264 Type	Baseline Profile/Main Profile/High Profile
H.265 Type	Main Profile
Video Bit Rate	32 Kbps to 16 Mbps
Scalable Video Coding (SVC)	H.264 and H.265 encoding support
** When the main stream resolution is 3840 × 2160, max frame rate is 20 fps for all streams.*	
Audio	
Audio Compression	G.711/G.722.1/G.726/MP2L2/PCM/MP3
Audio Bit Rate	64Kbps(G.711)/16Kbps(G.722.1)/16Kbps(G.726)/32-192Kbps(MP2L2)/8Kbps-320Kbps(MP3)
Environment Noise Filtering	Yes
Audio Sampling Rate	8 kHz/16 kHz/32 kHz/44.1 kHz/48 kHz

Smart Feature-Set	
Perimeter Protection	Line crossing detection, intrusion detection, region entrance detection, region exiting detection (Human&Vehicle classification)
Basic Event	Motion detection, video tampering alarm, exception (network disconnected, IP address conflict, illegal login, HDD full, HDD error), scene change detection
Linkage Method	Upload to FTP/NAS/memory card, notify surveillance center, send email, alarm output, audible warning, trigger capture
Region of Interest	1 fixed region for main stream, sub-stream and third stream
Image	
Image Enhancement	BLC, HLC, 3D DNR
Image Setting	Saturation, brightness, contrast, sharpness, AGC and white balance adjustable by client software or web browser
Day/Night Switch	Day/Night/Auto/Schedule/Triggered by Alarm In
Network	
Network Storage	microSD/SDHC/SDXC card (256 GB), local storage and NAS (NFS,SMB/CIFS), ANR
Protocols	TCP/IP, ICMP, HTTP, HTTPS, FTP, DHCP, DNS, DDNS, RTP, RTSP, PPPoE, NTP, UPnP, SMTP, SNMP, IGMP, 802.1X, QoS, IPv6, UDP, Bonjour, SSL/TLS
API	ONVIF (PROFILE S, PROFILE G), ISAPI, SDK
Security	Password protection, complicated password, HTTPS encryption, 802.1X authentication (EAP-MD5), watermark, IP address filter, basic and digest authentication for HTTP/HTTPS, WSSE and digest authentication for ONVIF, TLS1.2
Simultaneous Live View	Up to 6 channels
User/Host	Up to 32 users, 3 levels: administrator, operator and user
Client	iVMS-4200, Hik-Connect, Hik-Central
Web Browser	Plug-in required live view: IE8+, Chrome 41.0-44, Firefox30.0-51, Safari8.0-11 Plug-in free live view: Chrome 57.0+, Firefox 52.0+
Interface	
Communication Interface	1 RJ45 10M/100M self-adaptive Ethernet port
Audio	1 audio input (line in), two-core terminal block; 1 audio output(line out), two-core terminal block
Alarm	1 alarm input, 1 alarm output (max. 24 VAC/24 VDC@500 mA)
On-board storage	Built-in micro SD slot, up to 256 GB
General	
Web Client Language	32 languages English, Russian, Estonian, Bulgarian, Hungarian, Greek, German, Italian, Czech, Slovak, French, Polish, Dutch, Portuguese, Spanish, Romanian, Danish, Swedish, Norwegian, Finnish, Croatian, Slovenian, Serbian, Turkish, Korean, Traditional Chinese, Thai, Vietnamese, Japanese, Latvian, Lithuanian, Portuguese (Brazil)
General Function	Anti-flicker, three streams, heartbeat, mirror, privacy masks, pixel counter
Reset	Reset via reset button on camera body, web browser and client software
Startup and Operating Conditions	-30 °C to 60 °C (-22 °F to 140 °F), humidity 95% or less (non-condensing)

Storage Conditions	-30 °C to 60 °C (-22 °F to 140 °F), humidity 95% or less (non-condensing)
Power Supply	12 VDC ± 25%, Φ 5.5 mm coaxial power plug; reverse polarity protection; PoE (802.3at, class 4)
Power Consumption and Current	12 VDC, 1.12 A, max. 13.5 W; PoE (802.3at, 42.5 V to 57 V), 0.5 A to 0.3 A, max. 15 W
Material	Metal
Dimensions	Camera: Φ105 × 298 mm (Φ4.1" × 11.7") With package: 385 × 190 × 180 mm (15.2" × 7.5" × 7.1")
Weight	Camera: approx. 1360 g (3 lb.) With package: approx. 1960 g (4.3 lb.)
Approval	
EMC	FCC (47 CFR Part 15, Subpart B); CE-EMC (EN 55032: 2015, EN 61000-3-2: 2014, EN 61000-3-3: 2013, EN 50130-4: 2011 +A1: 2014); RCM (AS/NZS CISPR 32: 2015); IC (ICES-003: Issue 6, 2016); KC (KN 32: 2015, KN 35: 2015)
Safety	UL (UL 60950-1); CB (IEC 60950-1:2005 + Am 1:2009 + Am 2:2013); CE-LVD (EN 60950-1:2005 + Am 1:2009 + Am 2:2013); BIS (IS 13252(Part 1):2010+A1:2013+A2:2015); LOA (IEC/EN 60950-1)
Chemistry	CE-RoHS (2011/65/EU); WEEE (2012/19/EU); Reach (Regulation (EC) No 1907/2006)
Protection	Ingress protection: IP67 (IEC 60529-2013), IK10(IEC 62262:2002)

** Listed resolutions are only selectable options. It does not mean that all streams can work at their maximum resolution at the same time.*

Available Model

DS-2CD2686G2T-IZS (2.8 to 12 mm)

Dimension

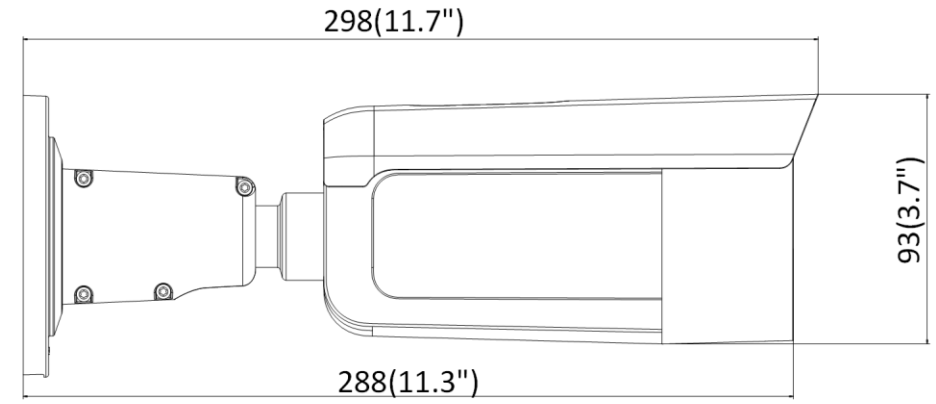

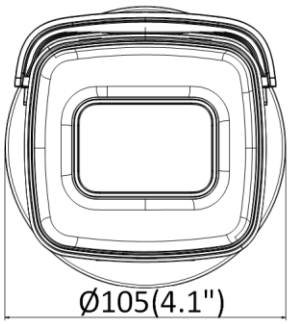

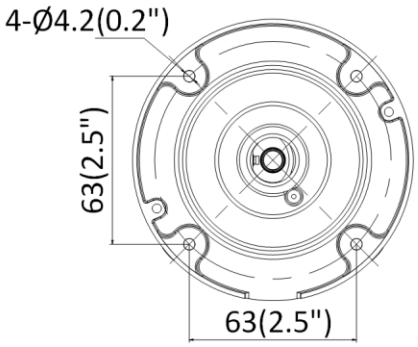

Unit: mm(inch)

Accessory

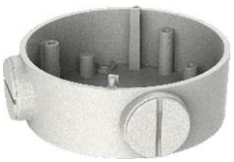

DS-1260ZJ
Junction Box

DS-1276ZJ-SUS
Corner Mount

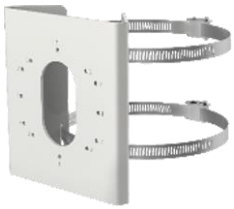

DS-1275ZJ-S-SUS
Vertical Pole Mount

DS-1280ZJ-S
Junction Box

Distributed by

Headquarters
No.555 Qianmo Road, Binjiang District,
Hangzhou 310051, China
T +86-571-8807-5998
overseasbusiness@hikvision.com

Hikvision USA
T +1-909-895-0400
sales.usa@hikvision.com

Hikvision Europe
T +31-23-5542770
sales.eu@hikvision.com

Hikvision UK & Ireland
T +01628-902140
sales.uk@hikvision.com

Hikvision UAE
T +971-4-4432090
salesme@hikvision.com

Hikvision Russia
T +7-495-669-67-99
saleru@hikvision.com

Hikvision Australia
T +61-2-8599-4233
salesau@hikvision.com

Hikvision Italy
T +39-0438-6902
info.it@hikvision.com

Hikvision South Africa
Tel: +27 (10) 0351172
sale.africa@hikvision.com

Hikvision Singapore
T +65-6684-4718
sg@hikvision.com

Hikvision Korea
T +82-(0)31-731-8817
sales.korea@hikvision.com

Hikvision India
T +91-22-28469900
sales@pramahikvision.com

Hikvision Brazil
T +55 11 3318-0050
Latam.support@hikvision.com

Hikvision France
T +33(0)1-85-330-450
info.fr@hikvision.com

Hikvision Spain
T +34-91-737-16-55
info.es@hikvision.com

Hikvision Poland
T +48-22-460-01-50
info.pl@hikvision.com

Hikvision Canada
T +1-866-200-6690
sales.canada@hikvision.com

Hikvision Turkey
T +90 (216)521 7070- 7074
sales.tr@hikvision.com

Hikvision Kazakhstan
T +7-727-9730667
nikia.panfilov@hikvision.ru

Hikvision Tashkent
T +99-87-1238-9438
uzb@hikvision.ru

Hikvision Indonesia
T +62-21-2933759
Sales.Indonesia@hikvision.com

Hikvision Thailand
T +662-275-9949
sales.thailand@hikvision.com

Hikvision Malaysia
T +601-7652-2413
sales.my@hikvision.com

Hikvision Vietnam
T +84-974270888
sales.vt@hikvision.com

Hikvision Hong Kong
T +852-2151-1761
info.hk@hikvision.com

Hikvision Colombia
sales.colombia@hikvision.com

© Hikvision Digital Technology Co., Ltd. 2019 | Data subject to change without notice |

05059720190805