DS-2CD2T47G1-L
4 MP ColorVu Fixed Bullet Network Camera

ColorVu

Key Features

- Max. 2688 × 1520 @30fps
- 2.8 mm/4 mm/6 mm fixed lens
- H.265+, H.264+
- 120dB WDR
- 0.0014 @ (F1.0, AGC ON), 0 Lux with Light
- Built-in micro SD/SDHC/SDXC slot, up to 128G
- IP67
- 24/7 full time color

ColorVu

Hikvision ColorVu technology provides 24/7 vivid colorful images with F1.0 advanced lenses, high performance sensors and friendly lighting. F1.0 super-aperture collects more light to produce brighter images. Advanced sensor technology can vastly improve the utilization of available light. In zero-light scenarios, built-in, warm supplemental lighting works to guarantee colorful images.

Specification

Camera	
Image Sensor	1/1.8" Progressive Scan CMOS
Min. Illumination	0.0014 @ (F1.0, AGC ON), 0 Lux with Light
Shutter Speed	1/3 s to 1/100,000 s
Slow Shutter	Yes
DNR	3D DNR
Wide Dynamic Range	120 dB
Angle Adjustment	Pan: 0° to 360°, tilt: 0° to 90°, rotate: 0° to 360°
Lens	
Focal length	2.8/4/6 mm
Aperture	F1.0
Focus	Fixed
FOV	2.8 mm, horizontal FOV: 109°, vertical FOV: 55°, diagonal FOV: 138° 4 mm, horizontal FOV: 94°, vertical FOV: 48°, diagonal FOV: 115° 6 mm, horizontal FOV: 57°, vertical FOV: 31°, diagonal FOV: 67°
Lens Mount	M16
Illuminator	
White Light Range	Warm white LEDs (3000K), up to 30m
Compression Standard	
Video Compression	Main stream: H.265+/H.265/H.264+/H.264 Sub-stream: H.265/H.264/MJPEG Third stream: H.265/H.264
H.264 Type	Main Profile/High Profile
H.265 Type	Main Profile
Video Bit Rate	32 Kbps to 16 Mbps
Smart Feature-set	
Behavior Analysis	Line crossing detection, intrusion detection, object removal detection, unattended baggage detection
Exception Detection	Scene change detection
Face Detection	Yes
Image	
Max. Resolution	2688 × 1520
Main Stream	50Hz: 25fps (2688 × 1520, 2560 × 1440, 2304 × 1296, 1920 × 1080, 1280 × 720) 60Hz: 30fps (2688 × 1520, 2560 × 1440, 2304 × 1296, 1920 × 1080, 1280 × 720)
Sub-Stream	50Hz: 25fps (640 × 480, 640 × 360, 320 × 240) 60Hz: 30fps (640 × 480, 640 × 360, 320 × 240)
Third stream	50Hz: 25fps (1280 × 720, 640 × 360, 352 × 288) 60Hz: 30fp s(1280 × 720, 640 × 360, 352 × 240)
Image Enhancement	BLC/3D DNR/HLC
Image Settings	Rotate mode, saturation, brightness, contrast, sharpness, AGC, white balance adjustable by client software or web browser
Day/Night Switch	Day/Night
ROI (Region of Interest)	Support 1 fixed region for main stream and sub-stream separately
Network	
Network Storage	Support micro SD/SDHC/SDXC card (128G) local storage, NAS (NFS,SMB/CIFS), ANR

Alarm Trigger	Motion detection, video tampering detection, network disconnected, IP address conflict, illegal login, HDD full, HDD error
Protocols	TCP/IP, ICMP, HTTP, HTTPS, FTP, DHCP, DNS, DDNS, RTP, RTSP, RTCP, PPPoE, NTP, UPnP, SMTP, SNMP, IGMP, 802.1X, QoS, IPv6, UDP, Bonjour
General Function	One-key reset, anti-flicker, three streams, heartbeat, mirror, password protection, privacy mask, watermark, IP address filter
Firmware Version	V5.5.82
API	ONVIF (PROFILE S, PROFILE G), ISAPI
Simultaneous Live View	Up to 6 channels
User/Host	Up to 32 users 3 levels: Administrator, Operator and User
Client	iVMS-4200, Hik-Connect, iVMS-4500, iVMS-5200
Web Browser	Plug-in required live view: IE8+, Chrome 41.0-44, Firefox 30.0-51, Safari 8.0-11 Plug-in free live view: Chrome 45.0+, Firefox 52.0+
Interface	
Communication Interface	1 RJ45 10M/100M self-adaptive Ethernet port
On-board Storage	Built-in micro SD/SDHC/SDXC slot, up to 128 GB
Reset Button	Yes
General	
Operating Conditions	-30 °C to +60 °C (-22 °F to +140 °F), humidity 95% or less (non-condensing)
Power Supply	12 VDC ± 25%, Φ5.5 mm coaxial power plug PoE (802.3af, class 3)
Power Consumption	12 VDC, 0.7 A, max. 9.5 W PoE: (802.3af, 36 V to 57 V), 0.3 A to 0.1 A, max. 11 W
Protection Level	IP67
Material	Front cover: metal, back cover: metal
Dimension	Camera: Φ 105 × 290.7 mm (Φ 4.1" × 11.4") With package: 385 × 190 × 180 mm (15.2" × 7.5" × 7.1")
Weight	Camera: 1200 g (2.6 lb.) With package: 1800 g (4 lb.)

Available Model

DS-2CD2T47G1-L (2.8/4/6 mm)

Dimension

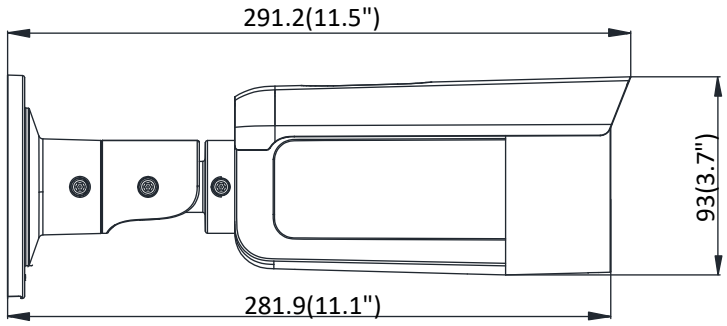

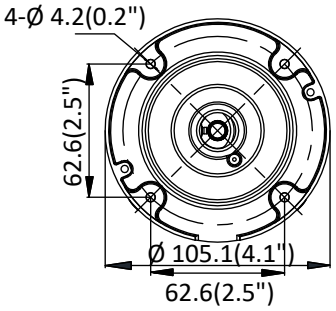

Unit: mm(inch)

Accessory

DS-1260ZJ

Junction Box

DS-1280ZJ-S

Junction Box

DS-1275ZJ-S-SUS

Vertical Pole Mount

Distributed by

Headquarters
No.555 Qianmo Road, Binjiang District,
Hangzhou 310051, China
T +86-571-8807-5998
overseasbusiness@hikvision.com

Hikvision USA
T +1-909-895-0400
sales.usa@hikvision.com

Hikvision Europe
T +31-23-5542770
sales.eu@hikvision.com

Hikvision UK & Ireland
T +01628-902140
sales.uk@hikvision.com

Hikvision UAE
T +971-4-4432090
salesme@hikvision.com

Hikvision Russia
T +7-495-669-67-99
saleru@hikvision.com

Hikvision Australia
T +61-2-8599-4233
salesau@hikvision.com

Hikvision Italy
T +39-0438-6902
info.it@hikvision.com

Hikvision South Africa
Tel: +27 (10) 0351172
sale.africa@hikvision.com

Hikvision Singapore
T +65-6684-4718
sg@hikvision.com

Hikvision Korea
T +82-(0)31-731-8817
sales.korea@hikvision.com

Hikvision India
T +91-22-28469900
sales@pramahikvision.com

Hikvision Brazil
T +55 11 3318-0050
Latam.support@hikvision.com

Hikvision France
T +33(0)1-85-330-450
info.fr@hikvision.com

Hikvision Spain
T +34-91-737-16-55
info.es@hikvision.com

Hikvision Poland
T +48-22-460-01-50
info.pl@hikvision.com

Hikvision Canada
T +1-866-200-6690
sales.canada@hikvision.com

Hikvision Turkey
T +90 (216)521 7070- 7074
sales.tr@hikvision.com

Hikvision Kazakhstan
T +7-727-9730667
nikia.panfilov@hikvision.ru

Hikvision Tashkent
T +99-87-1238-9438
uzb@hikvision.ru

Hikvision Indonesia
T +62-21-2933759
Sales.Indonesia@hikvision.com

Hikvision Thailand
T +662-275-9949
sales.thailand@hikvision.com

Hikvision Malaysia
T +601-7652-2413
sales.my@hikvision.com

Hikvision Vietnam
T +84-974270888
sales.vt@hikvision.com

Hikvision Hong Kong
T +852-2151-1761
info.hk@hikvision.com

Hikvision Colombia
sales.colombia@hikvision.com

© Hikvision Digital Technology Co., Ltd. 2019 | Data subject to change without notice |