DS-K1T671TM-3XF
Face Recognition Terminal

DS-K1T671TM-3XF face recognition terminal is a kind of access control device integrated with temperature screening function. It can fast taking skin-surface temperature and upload abnormal temperature event to the center, which can be widely applied in multiple scenarios, such as enterprises, stations, dwellings, factories, schools, campus and so on.

- Supports Vanadium Oxide uncooled sensor to measure target's temperature
- Temperature measuring range: 30 °C to 45 °C (86 °F to 113 °F), accuracy: 0.1 ° C, deviation: ± 0.5 °C
- Recognition distance: 0.3 to 2 m
- Fast temperature measurement mode: Detects face and takes temperature without identity authentication
- Multiple authentication modes are available: card and temperature, face and temperature, card and face and temperature, etc
- Face mask wearing alert: If the recognizing face does not wear a mask, the device will prompt a voice reminder. At the same time, the authentication or attendance is valid
- Forced mask wearing alert: If the recognizing face does not wear a mask, the device will prompt a voice reminder. At the same time, the authentication or attendance will be failed
- Displays temperature measurement results on the authentication page
- Triggers voice prompt when detecting abnormal temperature
- Configurable door status (open/close) when detecting abnormal temperature
- Transmits online and offline temperature information to the client software via TCP/IP communication and saves the data on the client software
- Face recognition duration ＜ 0.2 s/User; face recognition accuracy rate ≥ 99%
- 50,000 face capacity, 50,000 card capacity, and 100,000 event capacity
- Suggested height for face recognition: between 1.4 m and 1.9 m
- Supports 6 attendance status, including check in, check out, break in, break out, overtime in, overtime out
- Watchdog design and tamper function
- Audio prompt for authentication result
- NTP, manually time synchronization, and auto synchronization
- Connects to external access controller or Wiegand card reader via Wiegand protocol
- Connects to secure door control unit via RS-485 protocol to avoid the door opening when the terminal is destroyed
- Imports and export data to the device from the client software
- * Biometric recognition products are not 100% applicable to anti-spoofing environments. If you require a higher security level, use multiple authentication modes.
- * In order to get an accurate temperature, after the device is powered on, you should wait for 90 min to warm the device up.

▪ Specification

Temperature measurement	
Temperature range	30 °C to 45 °C (86 °F to 113 °F)
Sensor	Vanadium Oxide uncooled sensor
Resolution	120 × 160
Frame rate	25 fps
Measurement accuracy	0.1 °C
Measurement deviation	± 0.5 °C, without black body calibration
Measuring distance	0.3 to 2 m
Screen	
Size	7-inch
Type	Touch screen
Operation method	Touch screen
Camera	
Pixel	2 MP
Lens	Dual-lens
Network	
Wired network	Support, 10/100/1000 Mbps self-adaptive
Interface	
Network interface	1
RS-485	1
Wiegand	1
Lock output	1
Exit button	1
Door contact input	1
TAMPER	1
Capacity	
Card capacity	50,000
Face capacity	50,000
Event capacity	100,000
Authentication	
Card type	Mifare 1 card
Card reading distance	0 to 5 cm
Card reading duration	< 1 s
Face recognition duration	< 0.2 s per person
Face recognition distance	0.3 to 2 m
Function	
Face anti-spoofing	Support
Audio prompt	Support
Others	
Power supply	12 VDC/2 A
Working temperature	0 °C to 50 °C (32 °F to 122 °F) For temperature measurement: 10 °C to 35 °C (50 °F to 95 °F)
Working humidity	10 to 90% (No condensing)
Application environment	Indoor and windless environment use only

▪ Dimension

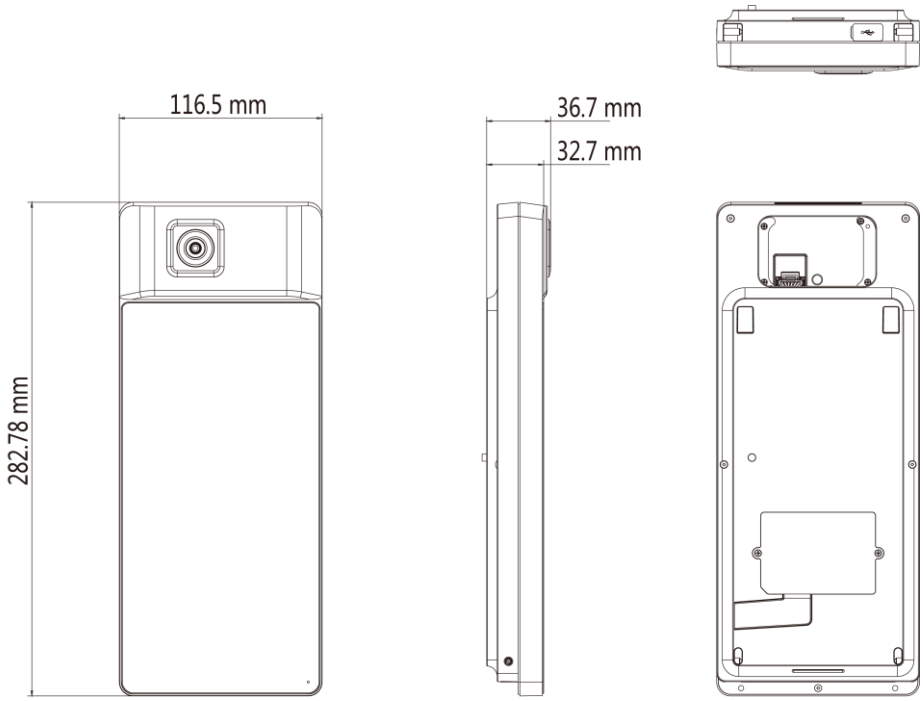

▪ Accessory

DS-KAB671-B Stand Stick	DS-DM0701BL

▪ Available Model

DS-K1T671TM-3XF

Distributed by

Headquarters
No.555 Qianmo Road, Binjiang District,
Hangzhou 310051, China
T +86-571-8807-5998
overseasbusiness@hikvision.com

Hikvision USA
T +1-909-895-0400
sales.usa@hikvision.com

Hikvision Europe
T +31-23-5542770
sales.eu@hikvision.com

Hikvision UK & Ireland
T +01628-902140
sales.uk@hikvision.com

Hikvision UAE
T +971-4-4432090
salesme@hikvision.com

Hikvision Russia
T +7-495-669-67-99
saleru@hikvision.com

Hikvision Australia
T +61-2-8599-4233
salesau@hikvision.com

Hikvision Italy
T +39-0438-6902
info.it@hikvision.com

Hikvision South Africa
Tel: +27 (10) 0351172
sale.africa@hikvision.com

Hikvision Singapore
T +65-6684-4718
sg@hikvision.com

Hikvision Korea
T +82-(0)31-731-8817
sales.korea@hikvision.com

Hikvision India
T +91-22-28469900
sales@pramahikvision.com

Hikvision Brazil
T +55 11 3318-0050
Latam.support@hikvision.com

Hikvision France
T +33(0)1-85-330-450
info.fr@hikvision.com

Hikvision Spain
T +34-91-737-16-55
info.es@hikvision.com

Hikvision Poland
T +48-22-460-01-50
info.pl@hikvision.com

Hikvision Canada
T +1-866-200-6690
sales.canada@hikvision.com

Hikvision Turkey
T +90 (216)521 7070- 7074
sales.tr@hikvision.com

Hikvision Kazakhstan
T +7-727-9730667
nikia.panfilov@hikvision.ru

Hikvision Tashkent
T +99-87-1238-9438
uzb@hikvision.ru

Hikvision Indonesia
T +62-21-2933759
Sales.Indonesia@hikvision.com

Hikvision Thailand
T +662-275-9949
sales.thailand@hikvision.com

Hikvision Malaysia
T +601-7652-2413
sales.my@hikvision.com

Hikvision Vietnam
T +84-974270888
sales.vt@hikvision.com

Hikvision Hong Kong
T +852-2151-1761
info.hk@hikvision.com

Hikvision Colombia
sales.colombia@hikvision.com

© Hikvision Digital Technology Co., Ltd. 2020 | Data subject to change without notice |